hicks baker
commercial property

Retail

To Let

21-22 Broad Street, Reading RG1 2BH

- Prime pitch in Reading's high street
- Highly visible location
- Situated next to M&S, opposite Primark and John Lewis while very close to the main entrance of The Oracle Shopping Centre
- Short walk from Reading train station
- Class E use
- Potentially suitable for restaurant use, STPP for extraction

Ground floor sales	1,083 sq ft
Basement ancillary	1,011 sq ft
Upper floors	not in use
ITZA - GF & Basement only	661 units
Rent	£110,000 p.a.
Est. buildings insurance	TBC
Rates Payable	£32,035 p.a.

For more information please contact Hicks Baker

T: 0118 959 6144 E: retail@hicksbaker.co.uk W: hicksbaker.co.uk

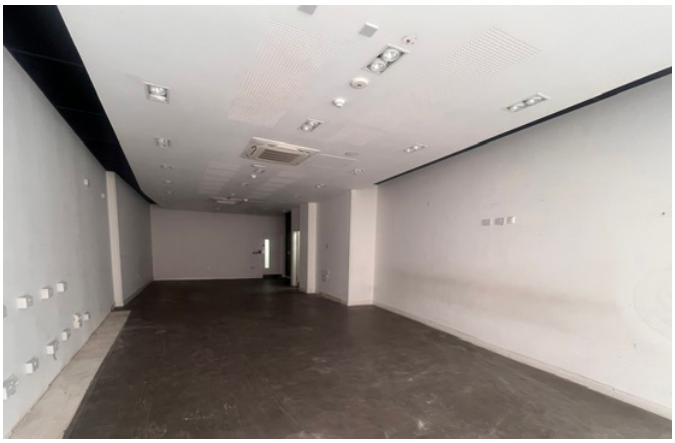

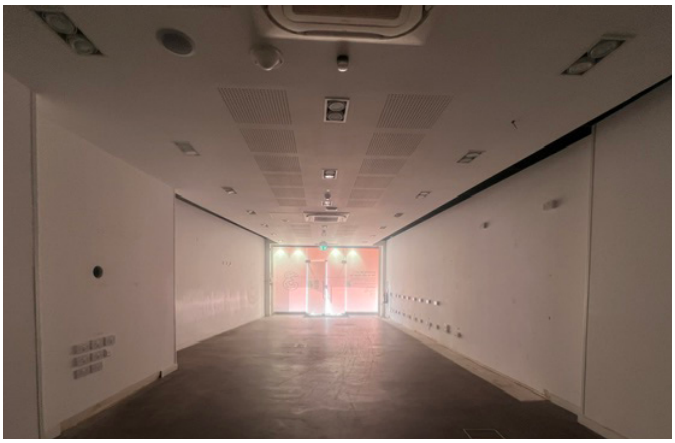

USE	Class E
TENURE	Leasehold
TERM	A new FRI lease is available direct from the Landlord on terms to be agreed
RATEABLE VALUE	We understand the rateable value to be £74,500 (2026 List). Although, we would advice prespective tenants should make their own enquiries via Reading Borough Council.
EPC	Rating C. Expires 13 Ocotber 2035
VAT	VAT is NOT payable

Richard Duncan
Retail and Leisure
E: r.duncan@hicksbaker.co.uk
T: +44 (0) 118 955 70831

Date of publication: May 2026

RICS

Transaction Management Advice

Lease code

You should be aware that the Code of Practice on Commercial Leases in England and Wales strongly recommends you seek professional advice from a qualified surveyor, solicitor or licensed conveyancer before agreeing or signing a business tenancy agreement. The code is available through professional institutions and trade associations or through the website here.

Misrepresentations Act 1967

Hicks Baker for themselves and for the vendors or lessors of this property, whose agents they are give, notice that: 1. The particulars are set out as a general outline only for the guidance of intended purchasers or lessees and do not constitute nor constitute part of an offer or contract. 2. All descriptions, dimensions. reference to condition and necessary permissions for use of occupation, and other details are given without responsibility and any intending purchasers or tenants should not rely on them as statements or representations of fact but must satisfy themselves by inspection or otherwise as to the correctness of each of them. 3. No person in the employment of Hicks Baker has any authority to make or give any representation or warranty whatsoever in relation to this property. Unless otherwise stated the terms exclude VAT.

21-22 Broad Street,
Reading RG1 2BH

Not to scale

Survey Date - June 2026

www.ProplanUK.co.uk

This plan is for guidance only and must not be relied upon as a statement of fact.

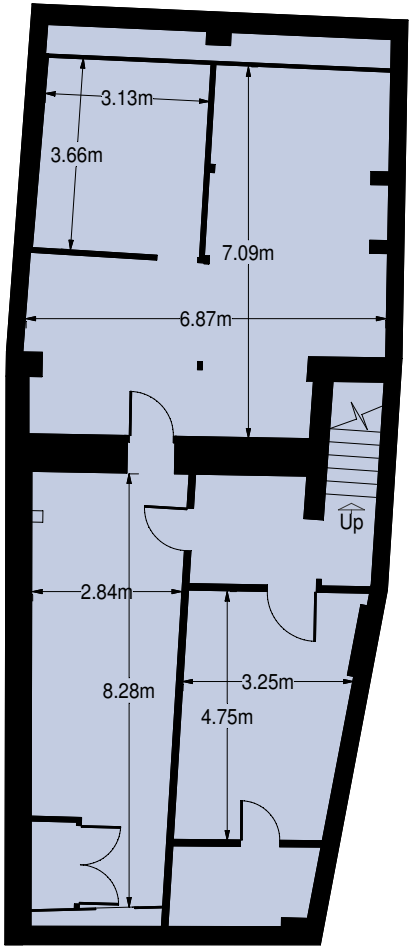

Basement

Mximum zoning
(beyond partition walls)

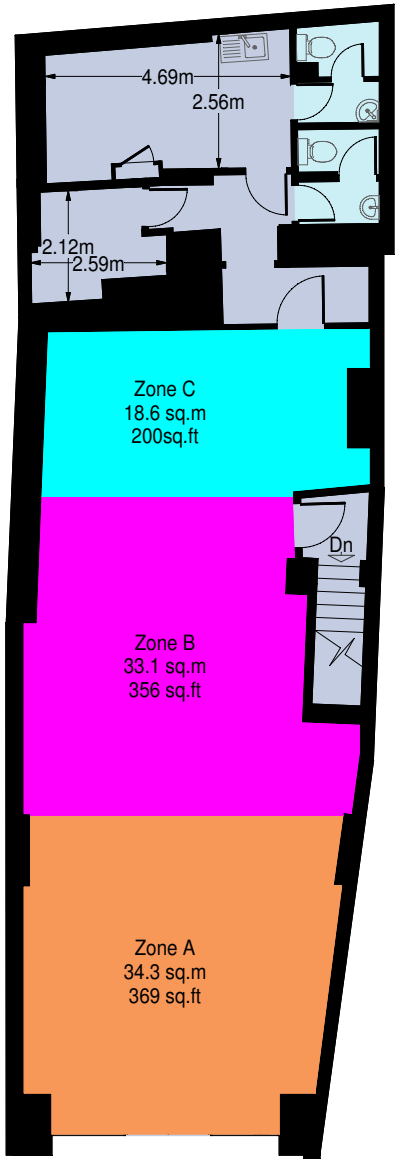

Ground Floor

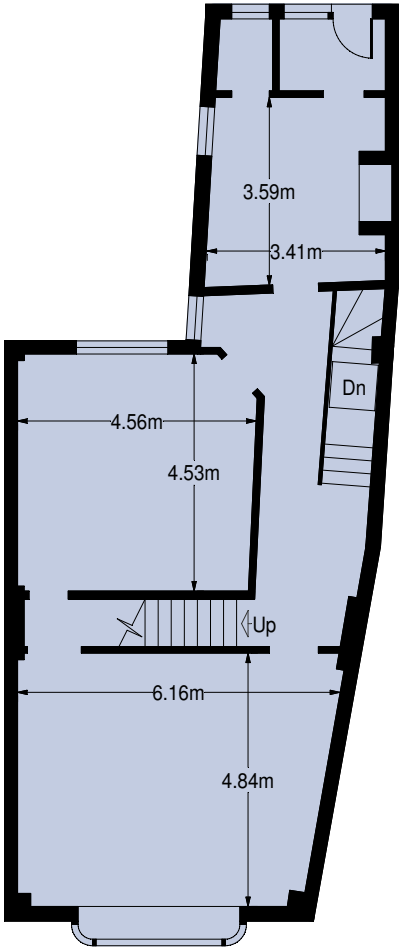

First Floor

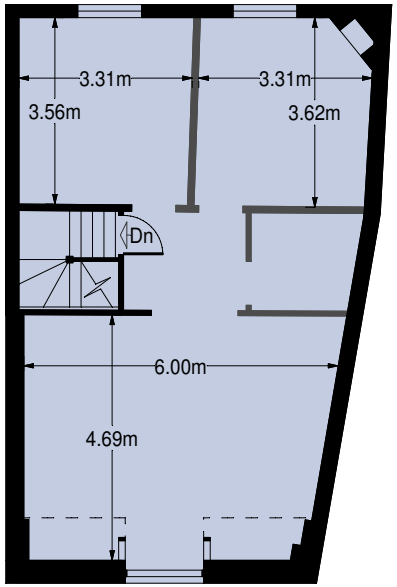

Third Floor

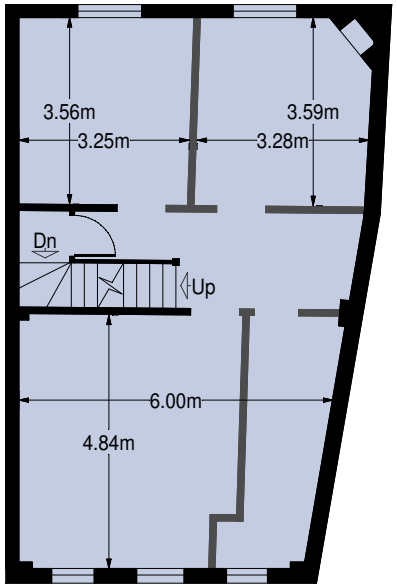

Second Floor

Reading (21-22 Broad Street)

Modified: 05-Jun-26 09:47:09 / Surveyed: 01-May-25

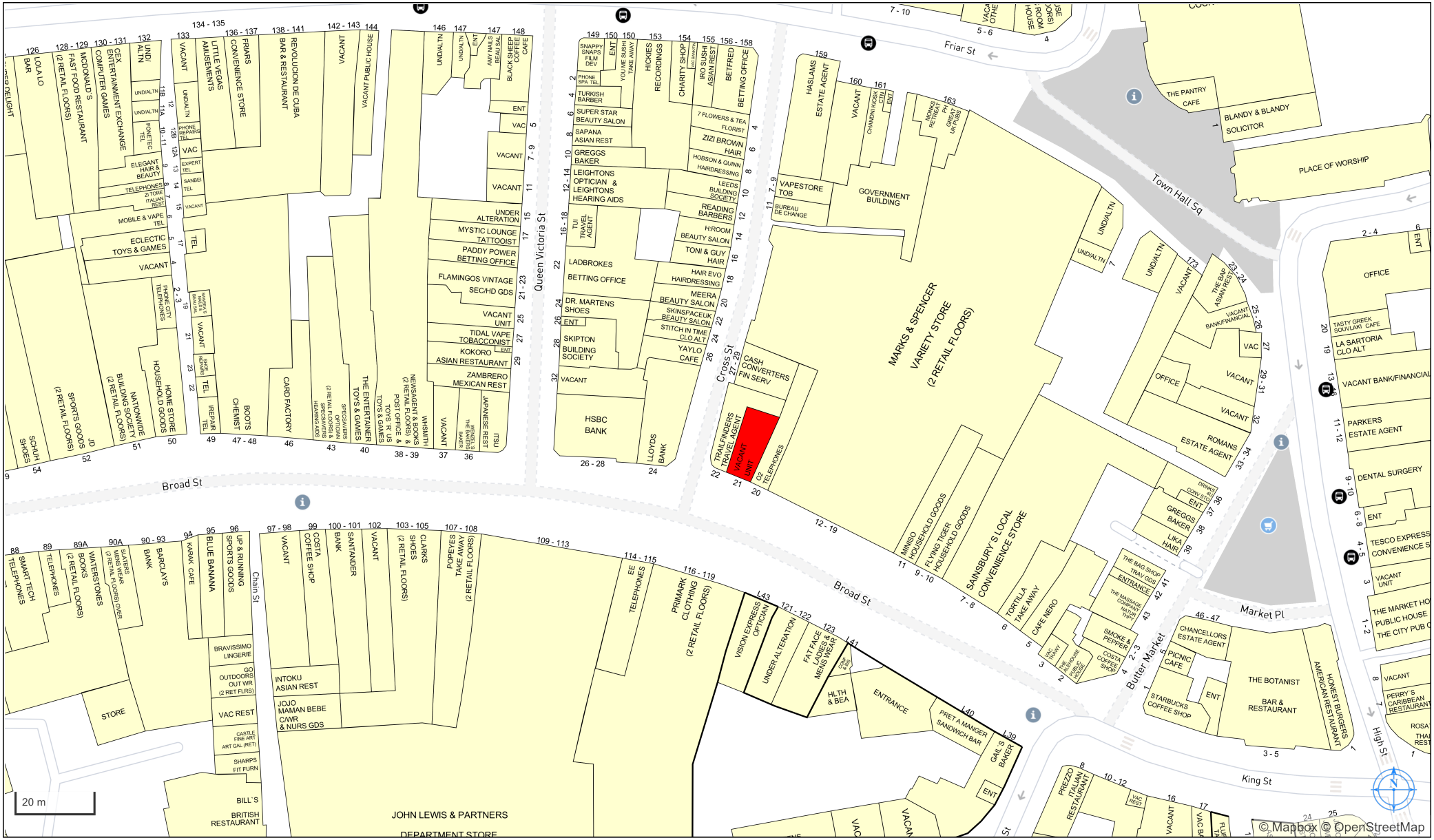

Experian Goad Plan Created: 05/06/2026

Copyright and confidentiality © 2025 Experian. All rights reserved.
© Crown Copyright and database rights 2025 AC0000807366

For more information on our products and services:
www.experian.co.uk/business-products/goad | salesG@uk.experian.com